RevNo	Revision note	Date	DWN	Checked
00	First issue	Oct.19.2020	E.H.Park	K.J.Kim

Drawing For Approval

LINE BLIND VALVE
TYPE : SLIDING
SIZE : 80A
PRESSURE RATE : JIS 10K
QTY : 1

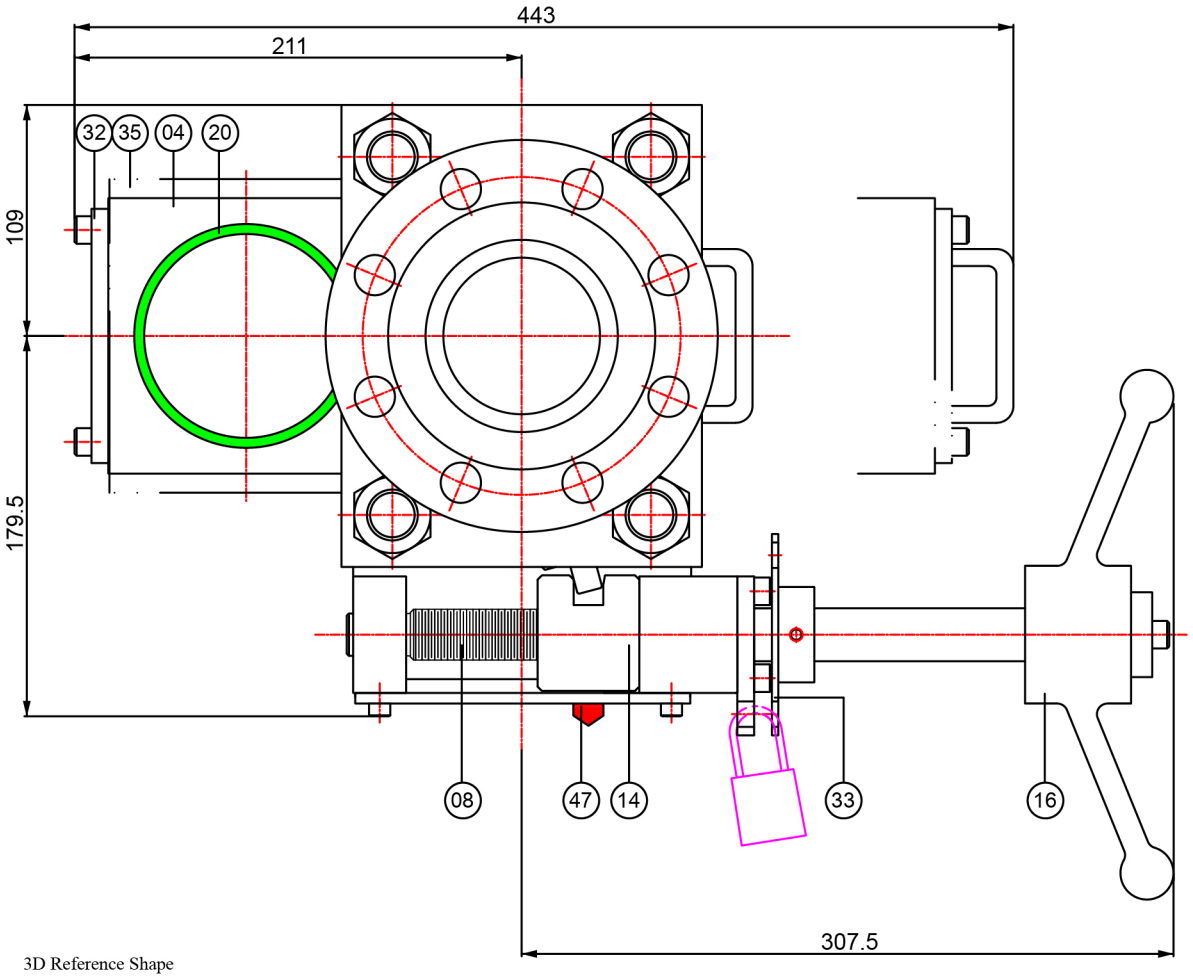

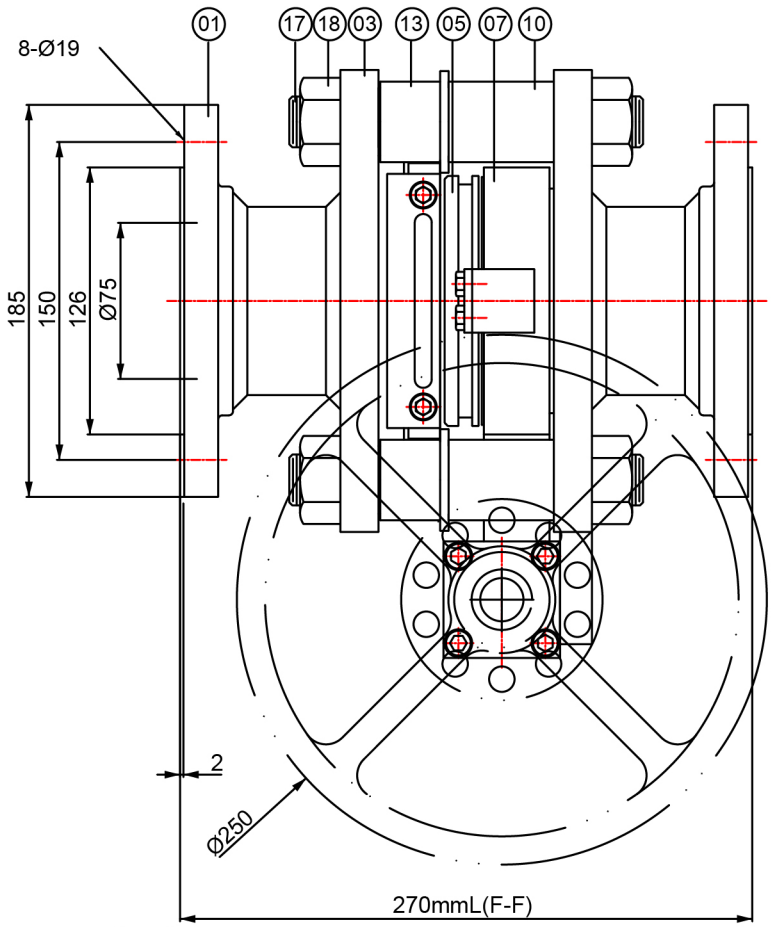

3D Reference Shape

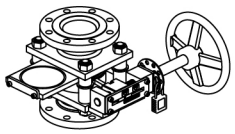

Design Note

Media : LNG
Operation : Hand Wheel
Pressure Rate : JIS 10K
End Connection : JIS B 2220-2012, Flanged RF
Design Pressure : 10 kg/cm^2
Design Temperature : Ambient
Seat Hyd. Test : 11 kg/cm^2
Shell Hyd. Test : 15 kg/cm^2
F-F dimension : 270 mm
* Gasket : Viton O-ring (Hardness Shore A 70)

Specification Of Compliance

Material : ASME/ASTM/JIS STANDARD
Flange : JIS B 2220-2012
Body : ASME B16.34
Stream Plate : ASME Sec. VIII Div.1 App.2
Blind : ASME B31.3 para 304.5.3
Welding Qualifications : ASME Sec. IX
Inspection and Test : ASME B16.34

No.	PART NUMBER	PART NAME	MATERIAL	Q'TY	REMARK	No.	PART NUMBER	PART NAME	MATERIAL	Q'TY	REMARK
47	SL03JIS10M103ID	INDICATOR	SB103	1		14	SL03JIS10M103TN	TRAVELING NUT	SB103	1	
35	SL03JIS10M316CO	GASKET COVER	SA240-316L	1		13	SL03JIS10M304GU	GUIDE ROLLER	SA276-304	4	
33	SL03JIS10M304LD	LOCKING DEVICE	SA240-304	1		10	SL03JIS10M304YO	YOKE	SA276-304	4	
32	SL03JIS10M304EN	END PLATE	SA240-304	2		08	SL03JIS10M304SC	SCREW SHAFT	SA276-304	1	
23	SL03JIS10MGRWI	WIPER	GRAPHITE	1		07	SL03JIS10M304GE	GEARSET	SA240-304	1	
22	SL03JIS10MFKMSOR	SEAT O-RING	FKM	1	AS568A-340	05	SL03JIS10M304SE	SEAT	SA240-304	1	
20	SL03JIS10MFKMBOR	BLIND O-RING	FKM	4	AS568A-343	04	SL03JIS10M304BL	BLIND PLATE	SA240-304	1	
18	SL03JIS10M8NU	HEX.NUT	SA194-8	8	M24	03	SL03JIS10M304ST	STREAM PLATE	SA240-304	2	
17	SL03JIS10MB8BO	STUD BOLT	SA193-B8	4	M24x171mmL	02	SL03JIS10M304PI	PIPE	SA312-TP304	2	Sch.80s
16	SL03JIS10M126WH	HAND WHEEL	SA126-B	1	O.D. 250mm	01	SL03JIS10M304FL	FLANGE	SA182-F304	2	JIS 10K Flanged RF

MODEL: SLFX-150	NAME/CLASS: LINE BLIND V/V (Sliding Type) JIS 10K, 80A	DWN	Oct.19.2020	E.H.Park
SPEC.: SL3-JS10-304/304/FKM		CHKD	Oct.19.2020	K.J.Kim
DRAWING NO.: SLW 200471		APRV	Oct.19.2020	B.R.Kim

SAMMI MACHINERY Co.,Ltd.
LINE BLIND SYSTEM

Projection	CAD	PROJECT	N.WEIGHT	PAGE
Dimension	mm	APPROVED BY CUSTOMER	abt. 35 kg	2/2

Any unauthorized review, use, disclosure or distribution is prohibited.